4.Before requesting service

・Please check the list shown below before requesting repairs. If the product still does not work, please contact us for repairs.
Please feel free to contact our sales office with any questions concerning the product.
For inquiry, you are required to identify the number indicated on the name plate of the product.

Problems	What to do
Power lamp stays turned off	・Confirm if supplied adaptor is securely inserted to a wall socket. ・Confirm if an adapter jack is securely inserted to the main body.
No reply (ACK, NACK)	・Confirm if straight cable is used ・Confirm a communication condition and protocol ・Set ID to ??"[3FH, 3FH] ・Confirm an end code "!"[21H] ・Confirm if the reset switch is not being pressed

※ Please note that any malfunction or damage resulting from modification is not guranteed under the warranty.

5.Specifications

Model	PHC-100A
Rated voltage	24V DC
Operative voltage range	108V AC～132V AC (AC adaptor (bundled))
Power consumption	Approx. 4W
Operative temp. range	0℃～+40℃
Operative humidity range	85%RH
Insulation resistance	To be measured by an insulation measuring device of 500VDC between the power terminal and the case. More than 1MΩ
Dielectric strength	1000VAC being applied between the power terminal and the case for 1 minute. Not braking insulation
Anti-noise	1500Vp-p　Pals range 1μsec、100nsec
Vibration proof	19.6m/s^2
Mass	Unit: Approx. 300 g　Supplied AC adaptor: approx. 160g
Serial communication	Serial interface: RS-232C compliant Transmission mode：Half-duplex mode　, Transmission code：ASCII code Synchronous mode：synchronous mode　, Communication speed：9600bps Data length：8 bit　, Stop bit：1 bit Parity, Flow Control: no setting required
Connector	D-SUB9P　Male connector
Intemal contact	Contact:Non Voltage contact, Number of contacts:8, Contact Capacity: AC125V,3A/DC30V,3A Life: Min. 200,000 operating (Rated Load, Operating 1,800times/h)
Output terminal	Terminal : Screwless terminal, Number of terminals: 16, Applicable wire: Solid wire φ0.4～φ1.2mm (AWG26～AWG18) ：Stranded wire φ0.3～φ0.75mm^2 (AWG22～AWG20) ※In case of using stranded wire, make sure to use an element wire which has more than φ0.18mm diameter.
Reset switch	Momentary switch with green power monitor LED On : All switch outputs are turned off Off : Usual operation, CTS line of RS-232C is on and switch LED is on. All the communication commands invalid.

Caution

- PATLITE Corporation disclaims all liability for any malfunction or damage occurring as a result of handling contrary to the instructions, cautions and warnings mentioned in this manual.
- Specifications are subject to change without notice.

E1R

PATLITE Corporation

International Division Sales & Marketing Department　TEL. +81-6-6763-8220
8-8 Matsuya-machi, Chuo-ku, Osaka 542-0067 JAPAN　FAX. +81-6-6763-8221
PATLITE (U.S.A.) Corporation　TEL. +1-310-328-3222
20130 S. Western Avenue, Torrance, CA 90501 U.S.A.　FAX. +1-310-328-2676
PATLITE (SINGAPORE) PTE LTD　TEL. +65-6226-1111
No.2 Leng Kee Road, #05-01 Thye Hong Centre, Singapore 159086　FAX. +65-6324-1411
PATLITE (CHINA) Corporation　TEL. +86-21-6630-8969
Room 512, Jufeng Business Building, No.697-3 Lingshi Road, Shanghai 200072, China　FAX. +86-21-6630-8938
PATLITE Corporation/European Office　TEL. +43-1-961-0655
Teinfaltstrasse 8/4 Stock, 1010, Vienna, Austria　FAX. +43-1-961-0655-210

http://www.patlite.co.jp/int/

8077-F
'09.4,AUTO

PATLITE

8077-F
T95100062
FT003

PC-Output Relay Unit

INSTRUCTION MANUAL

[TYPE : PHC-100A]

Thank you for purchasing the PC-Output Relay Unit,PHC-100A. To ensure proper operation, prease read this instruction manual thoroughly before attempting to use the system. Also, when undertaking maintenance, inspection or repair work, be sure to refer to this manual. If you have any questions regarding this product, please feel free to contact us.

TO OPERATE THIS PRODUCT SAFELY, PLEASE OBSERVE THE FOLLOWING

NOTES TO BE OBSERVED FOR SAFE OPERATION

Note to be followed to prevent any damage to the user and other personnel or to assets are as follows:

■The indications for warning are divided into the following classes according to the degree of danger or damage incurred when the warning is not taken into consideration and the product is not corrently used.

⚠ Warning	This symbol marks important instructions that, if ignored or incorrectly followed, could conceivably lead to death or serious injury.
⚠ Caution	This symbol marks important instructions that, if ignored or incorrectly followed, could conceivably lead to injury or property damage.

⚠Warning

- Please be careful to wire the unit according to the following instructions. Mis-wiring will damage the internal circuitry and could cause a fire.
- This product is for indoor use only. It should be used in a place where it is protected from rain and water. Moisture in the unit could cause a breakdown of the unit or electric shock.

⚠Caution

- Do not use this product in a corrosive gas atmoshere.

1.Parts name

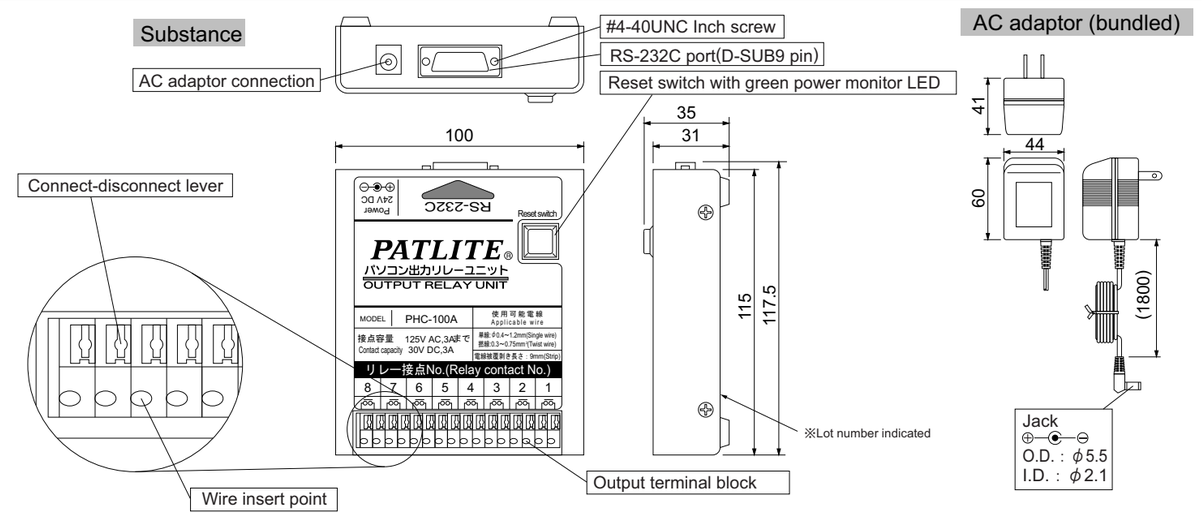

2.How to make wiring connection

⚠Warning

- Be sure to turn the power off before wiring. You may short-circuit the PCB or experience an electric shock.
- Since this product uses screwless terminals, be sure to follow the instructions in this manual regarding wire type, wire diameter, and strip length. Otherwise, there may be bad connections, excessive heating, or wires coming out of the terminals.
- Make sure to insert the wire all the way to the bottom of the receptacle so that none of the stripped section is showing. Otherwise there may be faulty operation, leakage or fire if the stripped section touches the product or if the wire comes out.

⚠ Caution

- The capacity of the internal contact is AC125V(DC30V), 3A. When inductive loads such as bulbs or motors are used, there is an increase in current, which may shorten the life of the internal contact.
  If the load current exceeds the capacity, or there is excessive inrush current, it may cause burning or welding of the contact.
- This product is to be connected to one RS-232C serial port. Do not connect other devices simultaneously.
  Otherwise, the result may be malfunction or damage to the serial port or devices.

⚠ Caution

● Do not use excessive force when inserting a wire into the wire insert point. Damage may result to the terminal or product.

1.Wiring to the terminal block

●Terminal block

Applecable wire	A solid wire　ϕ0.4～ϕ1.2mm　（AWG26～18） A twisted wire　0.3～0.75mm^2　（AWG22～20） ※When using stranded wire, the strand should be more than 0.18 mm diameter.
Strip length	9mm
Connect-disconnect lever operation	A slotted screwdriver　nominal size 4.5mm×50mm

●How to make wiring connection

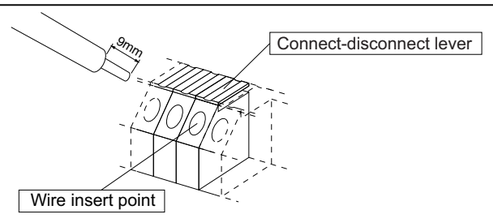

① Strip the wire insulation back 9 mm

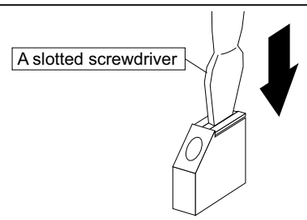

② Depress the connect-disconnect lever with a slotted screwdriver

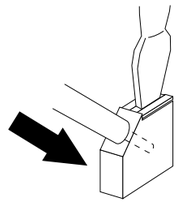

③ While holding the lever depressed, insert the wire

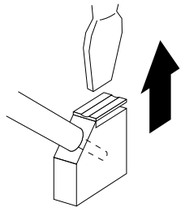

④ Remove the screwdriver to and check that the wire does not come out easily

2.Connecting the RS-232C cable (Not supplied with the PHC-100A)

・ Connect the (straight) cable DSUB9P (female) connector to the PHC-100A communications port.
Connect the other end of the cable to your PC or DTE device

■PHC-100A

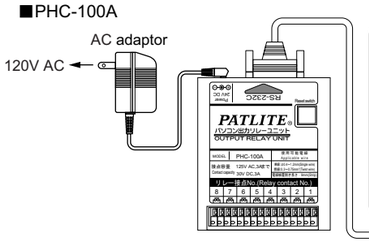

Connection cable

PHC-100A D-SUB9P Signal	PHC-100A D-SUB9P Pin No.	Data output (PC) Signal	Data output (PC) D-SUB9P Pin No.	Data output (PC) D-SUB25P Pin No.
FG	-	FG	-	1
TXD	3	TXD	3	2
RXD	2	RXD	2	3
RTS	7	RTS	7	4
CTS	8	CTS	8	5
SG	5	SG	5	7

Shield

■P C

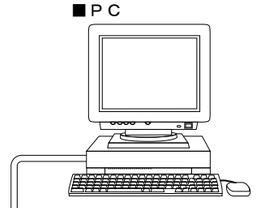

※ Refer to instructions manual of PC when connecting this product to PC with RS-232C straight cable.

3.Wiring example

The internal contacts are non-voltage contacts (relay contact). They operate products which contact capacity is under AC125V・3A or DC30V・3A.
The products having the different voltage can be connected to each contact, since each contact is independent.

■Wiring example 1

Power operating：In the case of products operated by power supply(When the 120V AC product is used)

●Wiring diagram

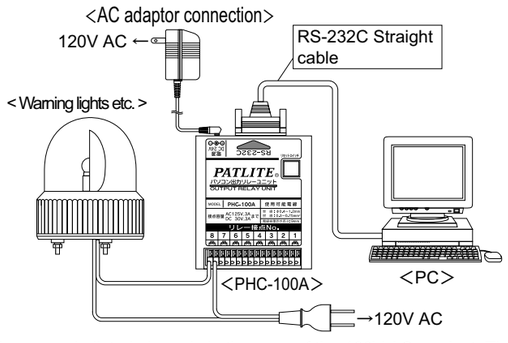

●Block diagram

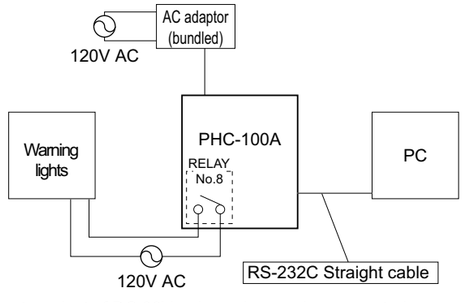

※The example listed above is in the case of the 120V AC product. The direct current product of DC 30V or less also can be connected.

■Wiring example 2

Lead wire operating : In the case of products operated by lead wire. (When the 120V AC product is used)

●Wiring diagram

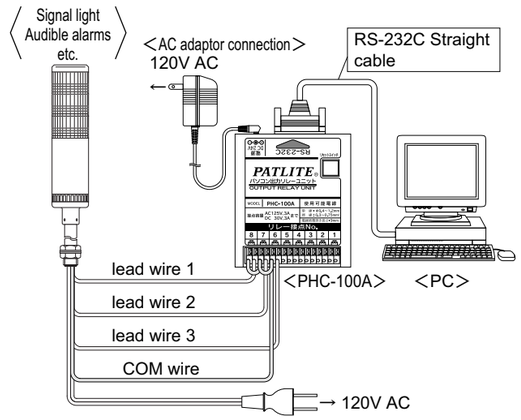

●Block diagram

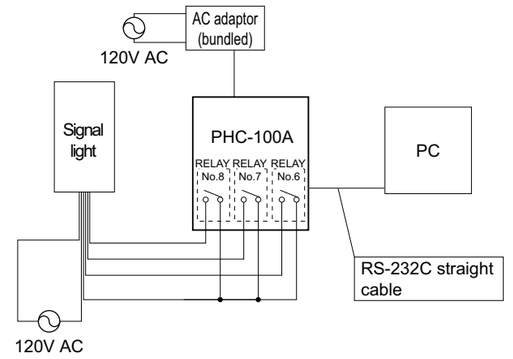

3.How to use (ASCII command requirements)

・ Software is not bundled with this product. Please confirm that the program you select will operate properly according to the communication protocol and conditions listed below. ID data is stored in ROM and therefore will not be cleared when the unit is turned off.

Communication protocol

Header	ID1	ID2	Command	Data1	Data2	End code
@	?	?	1	2	>	!

Programming example as above executes the commands set on No.6,4,3 and 2.

Header	1 bite	@ ［40H］
ID	2 bite	The default ID is ?? [3FH 3FH]. In this case, the unit does not use an ID.
Command	1 bite	0 ［30H］…Action—OFF 1 ［31H］…Action—ON ? [3FH] --- Create or change ID
Data	2 bite	●Command to operate 1-8 outputs Example input: Letter(ASCII code) 2 ［32H］; Bit data 0 0 1 1 0 0 1 0; Action No. 8 7 6 5 4 3 2 1; > ［3EH］ 0 0 1 1 1 1 1 0 This example operates switches # 6,4,3 and2. ●Command to set ID # when ID is used (optional)
End code	1 bite	! ［21H］

Examples

●To excute the command of No.4 on

	Header	ID1	ID2	command	Data1	Data2	End code
ASCII code	@	?	?	1	0	8	!
HEX code	40H	3FH	3FH	31H	30H (00110000B)	38H (00111000B)	21H

●To cancel all the commands

	Header	ID1	ID2	command	Data1	Data2	End code
ASCII code	@	?	?	0	?	?	!
HEX code	40H	3FH	3FH	30H	3FH (00111111B)	3FH (00111111B)	21H

●To change ID of PHC-100A from 23[32H*33H] to 46[34H*36H]

	Header	ID1	ID2	command	Data1	Data2	End code
ASCII code	@	2	3	?	4	6	!
HEX code	40H	32H	33H	3FH	34H	36H	21H

■Reset switch

All commands can be reset by pressing a reset switch.
While the reset switch is pressed, this product does not accept any communication commands, and then, CTS line of RS-232C will be at low level.

Serial communication specification

Communication specification	RS-232C compliant
Communication speed	9600bps
Data length	8 bit
Stop bit	1 bit
Parity	Any setting
Flow control	Any setting
Synchronous mode	synchronous mode
Transmission mode	Half-duplex mode
Transmission code	ASCII code
Reply code	ACK［06H］NACK［15H］

Reply code

Reply code	Transmission condition	Error contents
ACK［06H］	When data transmission is finished	———
NACK［15H］	Command error	When a command, other than 0[30H], 1[31H] or ?[3FH], is set
	Data error	When data, other than 0[30H] - ?[3FH], is used
	Timeout	Reply interval between data is more than 5 seconds after receipt of header

※The product does not work if a command is sent before ACK(06H) is replied.

ASCII code

Lower code \ Higher code	0	1	2	3	4
0	NUL	DLE	Space	0	@
1	SOH	DC1	!	1	A
2	STX	DC2	"	2	B
3	ETX	DC3	#	3	C
4	EOT	DC4	$	4	D
5	ENQ	NAK	%	5	E
6	ACK	SYN	&	6	F
7	Bell	ETB	'	7	G
8	BS	CAN	(	8	H
9	HT	EM	)	9	I
A	LF	SUB	*	:	J
B	VT	ESC	+	;	K
C	FF	FS	,	<	L
D	CR	GS	-	=	M
E	SO	RS	.	>	N
F	SI	US	/	?	O

8077-F